2010/06/01 (12:47:14)

This drawing is provisional and subject to our reconfirmation and/or revision without notice.

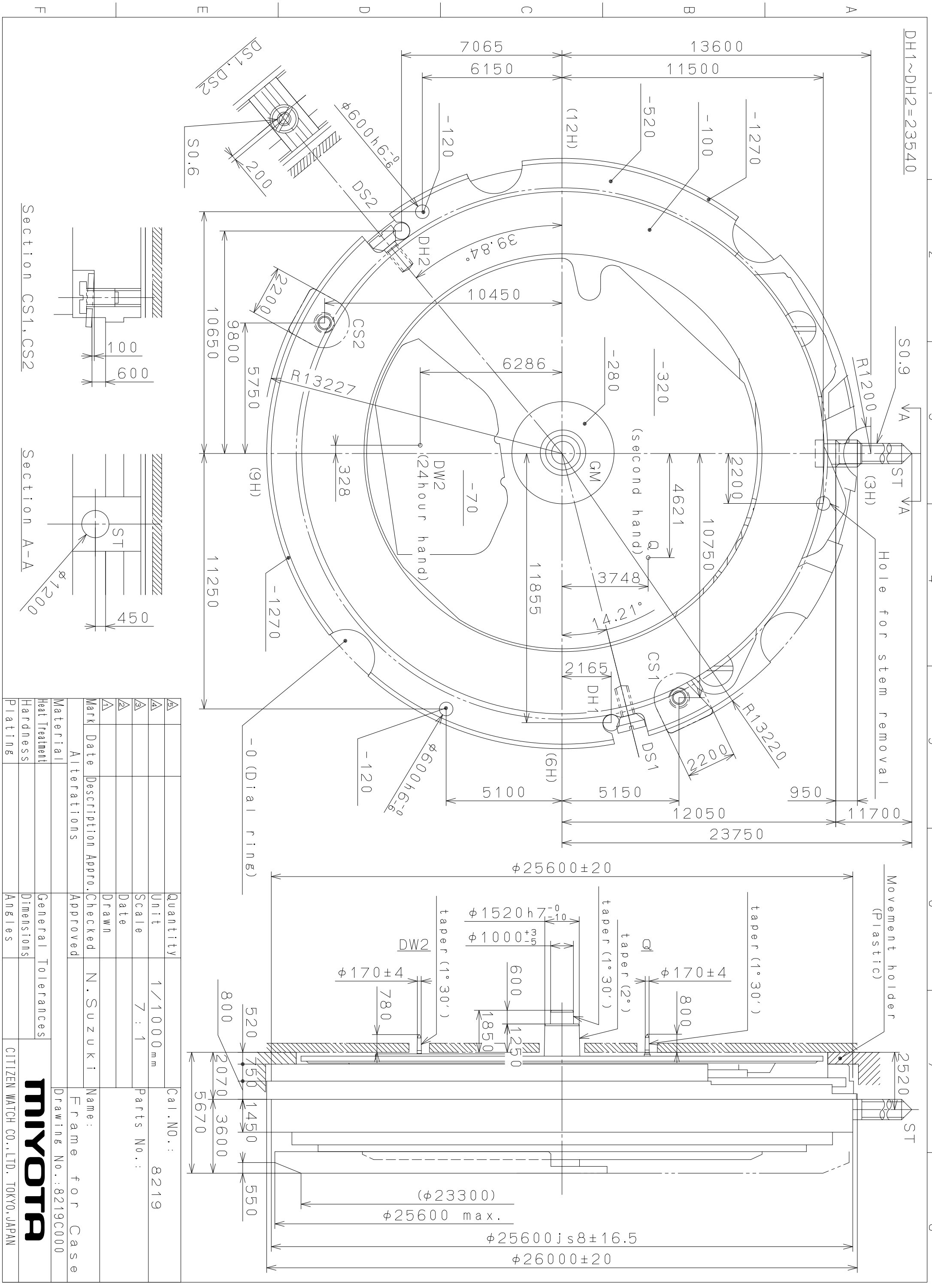

Quantity			
Unit	1/1000mm	Cal.No.:	8219
Scale	7:1	Parts No.:	
Date			
Drawn			
Checked	N.Suzuki	Name:	Frame for Case
Approved		Drawing No.:	8219C000

General Tolerances
Dimensions
Angles

Mark	Date	Description Approx.	
1			
2			
3			
4			
5			

Alterations

Material
Heat Treatment
Hardness
Plating

MIYOTA

CITIZEN WATCH CO.,LTD. TOKYO,JAPAN

This drawing is provisional and subject to our reconfirmation and/or revision without notice.
2010/06/01 (12:49:15)

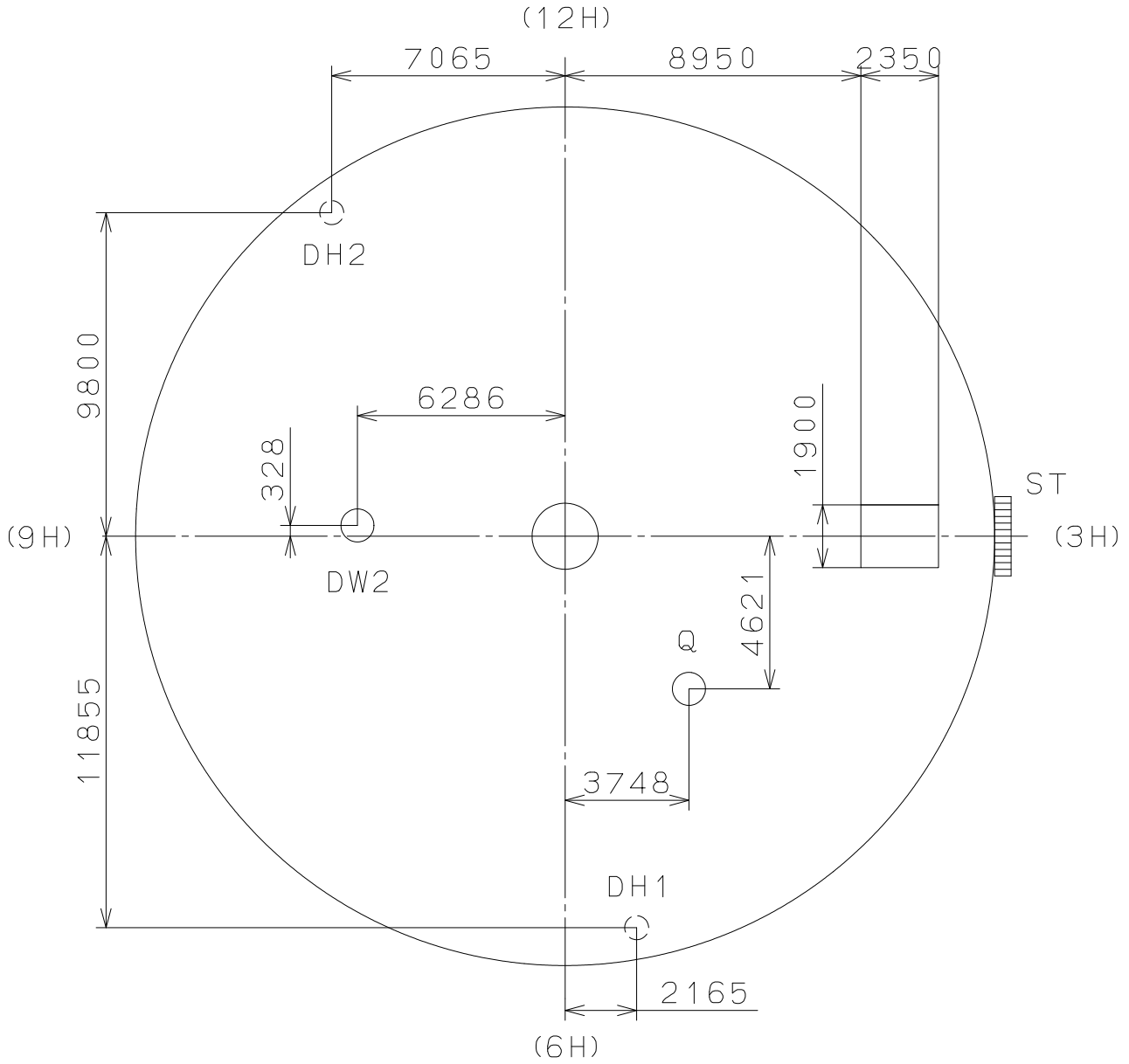

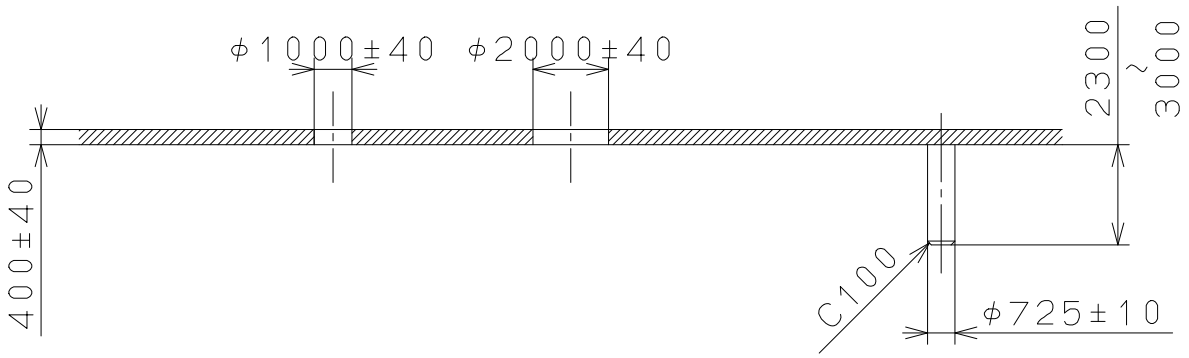

Q, DW2 CENTER DH1 (DH2)

5			Quantity		Cal.NO.: 8219-21A
4			Unit	1/1000mm	
3			Scale	5 : 1	Parts No.:
2			Date		
1			Drawn		
Mark	Date	Description Appro.	Checked	N.Suzuki	Name:
Alterations			Approved		Indications for Dial
Material					Drawing No.:8219D000
Heat Treatment			General Tolerances		MIYOTA
Hardness			Dimensions		
Plating			Angles		CITIZEN WATCH CO.,LTD. TOKYO,JAPAN

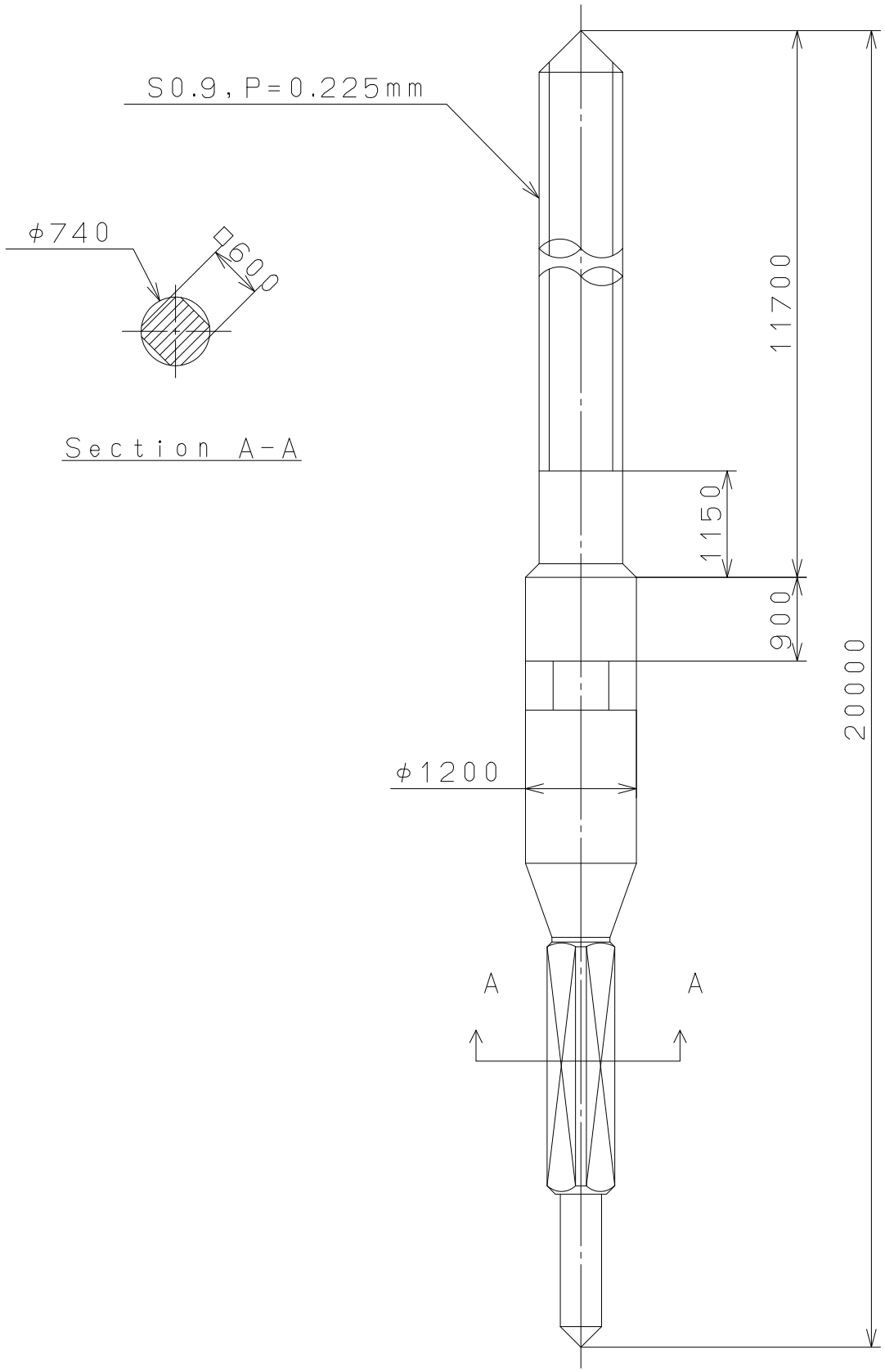

5			Quantity		Cal.NO.:
4			Unit	1/1000mm	
3			Scale	15 : 1	Parts No.:
2			Date		065-212
1			Drawn		
Mark	Date	Description Appro.	Checked	N.Suzuki	Name:
Alterations			Approved		SETTING STEM
Material					Drawing No.:2120S001
Heat Treatment			General Tolerances		MIYOTA
Hardness			Dimensions		
Plating			Angles		CITIZEN WATCH CO.,LTD. TOKYO,JAPAN

This drawing is provisional and subject to our reconfirmation and/or revision without notice.
2008/11/14 (11:30:42)

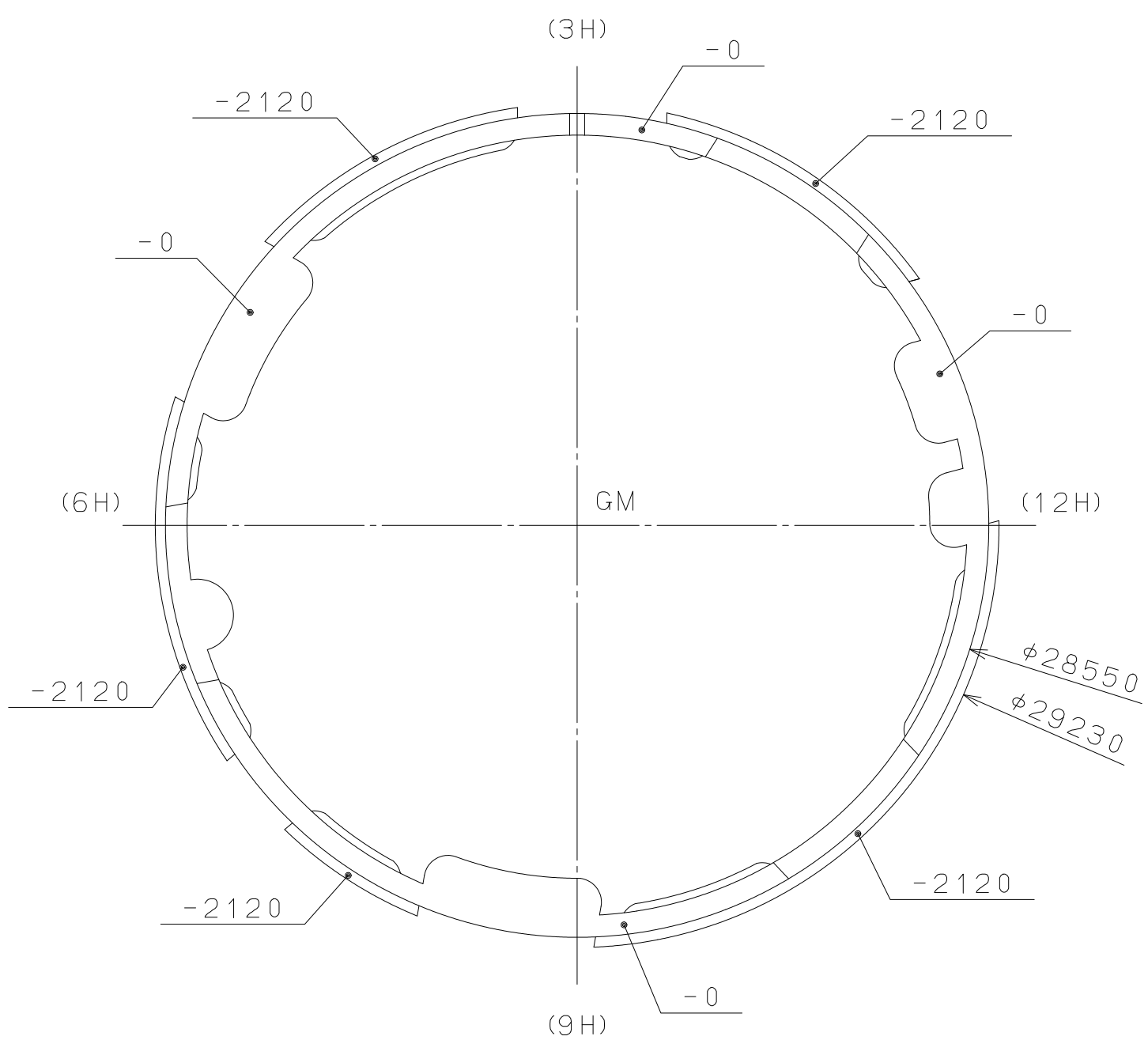

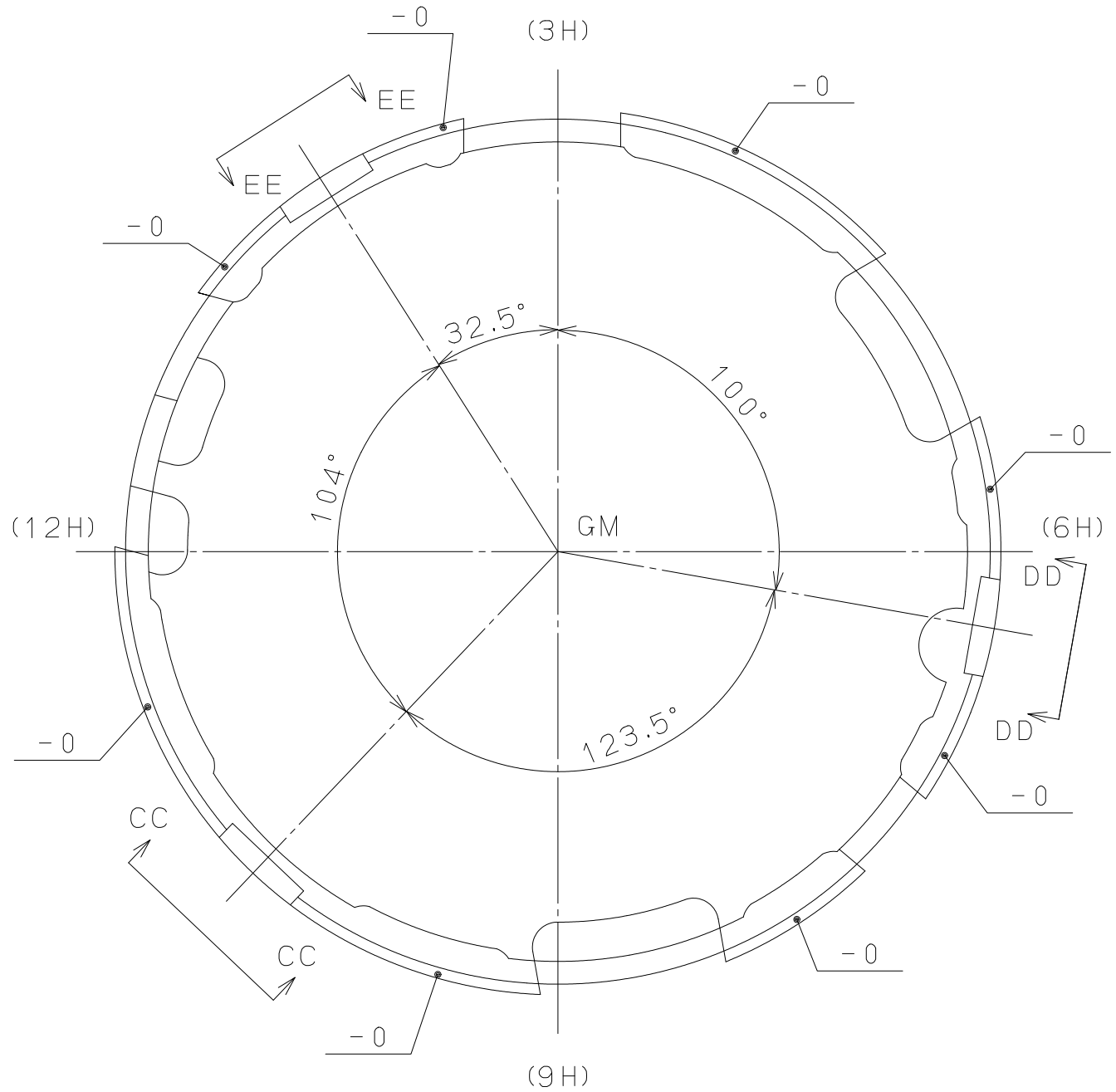

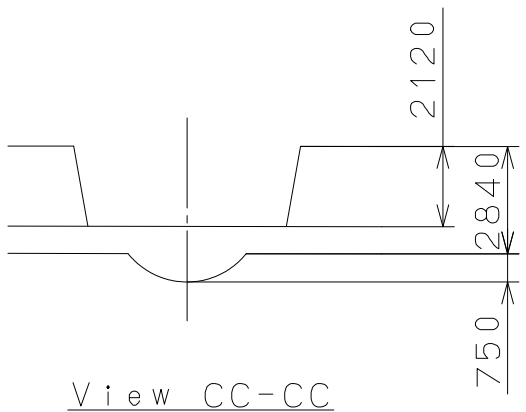

View CC-CC
DD-DD、EE-EE

5			Quantity		Cal.NO.:
4			Unit	1/1000mm	
3			Scale	5 : 1	Parts No.:
2			Date		500-710
1			Drawn		
Mark	Date	Description Appro.	Checked	N.Suzuki	Name:
Alterations			Approved		Casing Holder
Material					Drawing No.:8200E002
Heat Treatment			General Tolerances		MIYOTA
Hardness			Dimensions		
Plating			Angles		CITIZEN WATCH CO.,LTD. TOKYO,JAPAN

2009/11/02 (10:07:05)
This drawing is provisional and subject to our reconfirmation and/or revision without notice.