TIME MODULE

Revised on : 30. Dec. 08

Cal. PC21AF

ϕ 18. 50 mm

H 3. 15 mm

Item	Version No.
Specification	Version 2
Appearance	Version 6
Casing	Version 4
Hand Fitting	Version 4
Hand Setting Stem	Version 4
Dial - 1	Version 2
Casing Ring	Version 2
Assembly Plan	Version 2
Hands	Version 4

SII Products

MOVEMENT SPECIFICATIONS

CAL.PC21AF 6 3/4 X 8 Ligne Quartz / Three Hands
[High hand movement]

1. MOVEMENT DIMENSIONS	
· Outside diameter	φ18.20mm (12H~6H) x 14.11mm (3H~9H), φ18.50mm
· Casing diameter	φ17.80mm , φ18.10mm
· Total height	3.15 mm (including the battery)
2. TIME STANDARD	
· Type of quartz oscillator	Tuning fork
· Frequency of quartz oscillator	32,768 H Z
· Accuracy	Monthly rate: Less than 30 seconds per month at normal temperature range
· Regulation device	Nil
· Regulation hands unbalance	Second : Less than 0.07μN·m (7mg·mm) Minute : Less than 0.30μN·m (30mg·mm) Hour : Less than 0.30μN·m (30mg·mm)
3. BATTERY	
· Type	Silver oxide battery
· Size	φ6.8 x t 2.6 (mm)
· Battery life	Approx. 2 years
· Recommended battery	SR626W (SONY) SR626SW (SEIZAIKEN)
4. STEPPING MOTOR	
· Type	Two pole stepping motor
· Step	180° every second
5. JEWEL	0 jewel
6. ANTIMAGNETISM (direct current magnetic field)	≧1600 A / m
7. SHOCK RESISTANCE	On equal level with general quartz movement
8. OPERATING TEMPERATURE RANGE	From - 5℃ to + 50℃
9. SETTING MECHANISM	
· Crown at normal position	Free
· Crown pulled out to 1st click	Time setting, second setting and reset switch
10. TEST OF ACCURACY	
· Equipment to be used	Quartz Tester QT - 99 Greiner Quartz Timer - C Witschi Q-Tester 4000
· Duration of measurement	10 seconds
· Microphone to be used	Electromagnetic detection type (DM-1)

*** All specifications are subject to change without notice.**

SII Products

Version: 2

Appearance

Cal. PC21AF

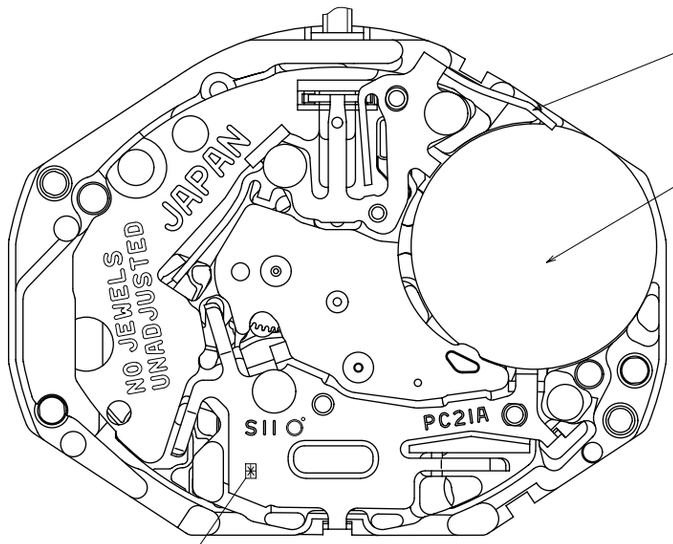

Battery side holding spring

Battery

	*
TYPE M	5

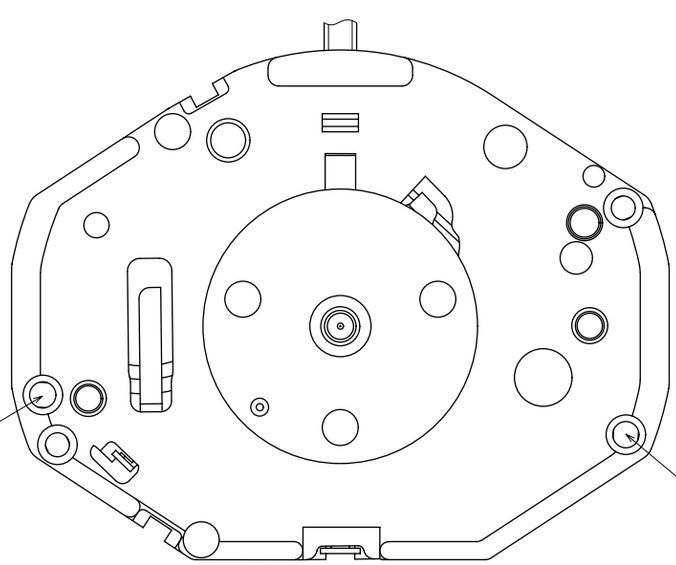

Dial leg hole

Dial leg hole

Scale : 5/1

Unit : 1=1/100mm

Version:6

SII Products

Casing

Cal. PC21AF

Battery Side Holding spring Type

* pull out stroke:56

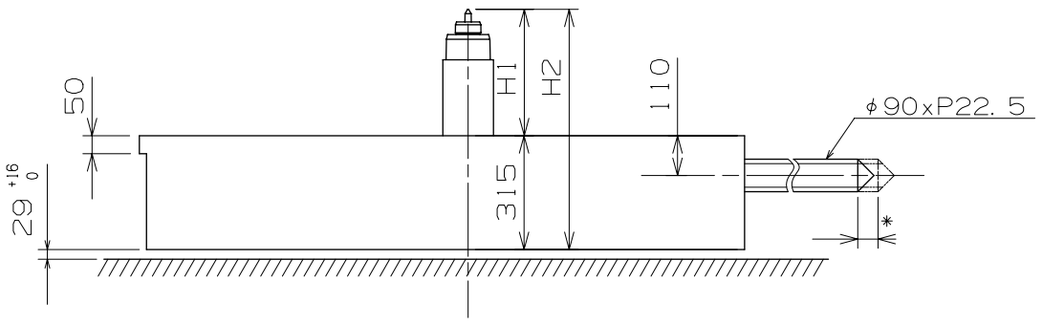

Center post		TYPE M
Maximum height from main plate surface	H1	350
Total height incl. movement	H2	665

Hand Setting Stem	TYPE A
L1	2472

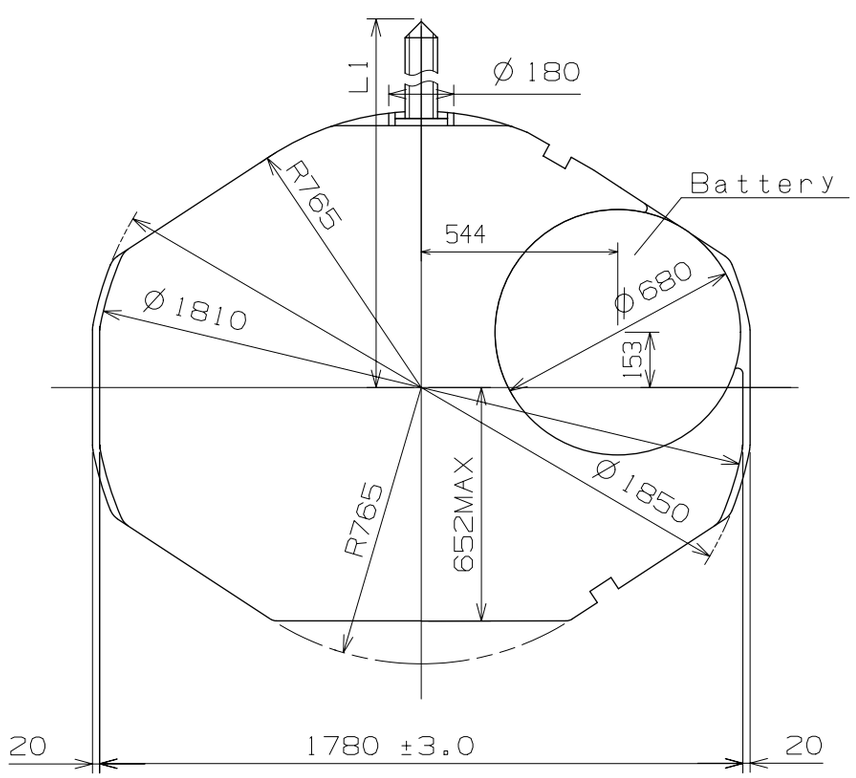

Scale : 5/1

Unit : 1=1/100mm

Version:4

SII Products

Casing

Cal. PC21AF

Battery Side Holding spring Type

* pull out stroke:56

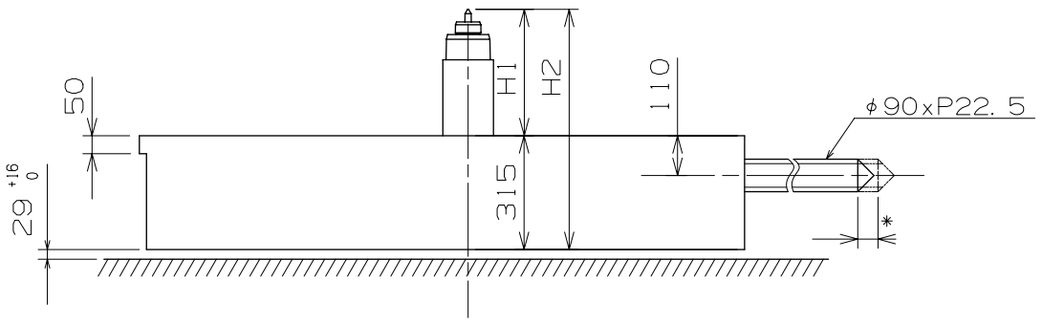

Center post 中心柱位		TYPE M 一般針高
Maximum height from main plate surface. 與機芯平面之最大高度	H1	350
Total height incl. movement. 機芯總高度	H2	665

Hand Setting Stem	TYPE A
L1	2472

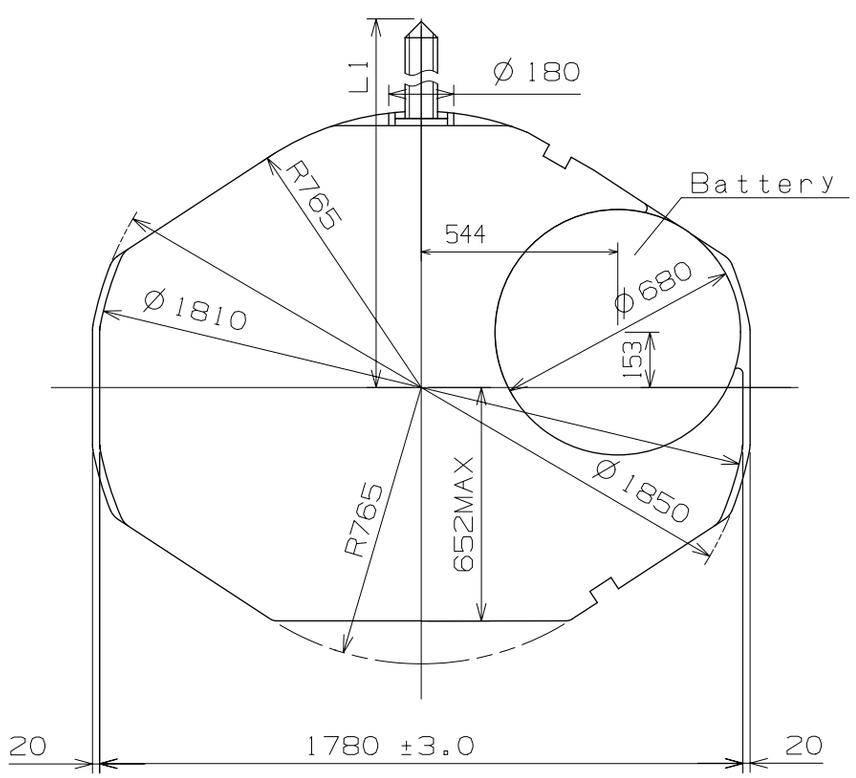

Scale : 5/1

Unit : 1=1/100mm

Version:4

SII Products

Hand Fitting

Cal. PC21AF

Hour hand unbalance ≦ 0.3μN·m(30mg·mm)
Minute hand unbalance ≦ 0.3μN·m(30mg·mm)
Second hand unbalance ≦ 0.07μN·m(7mg·mm)

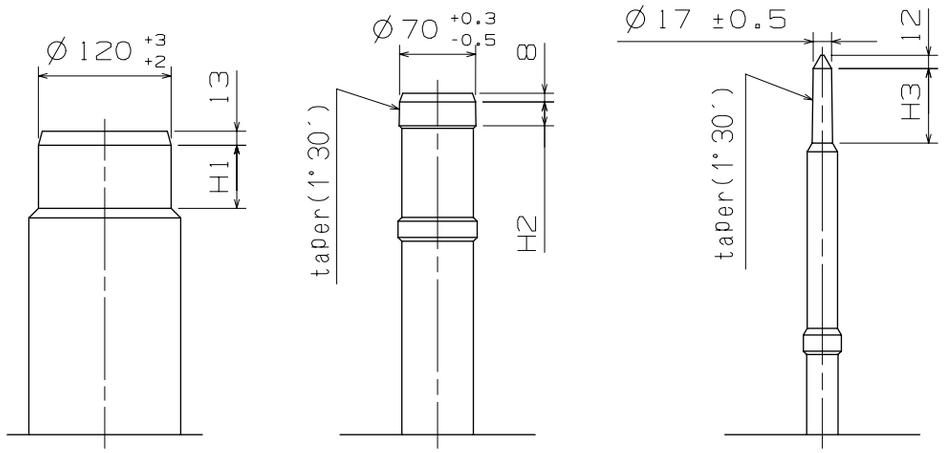

Hour wheel　　Center wheel　　Fourth wheel

	Part.No.			Dimension		
	Hour wheel	Center wheel	Fourth wheel	H1	H2	H3
TYPE M	0273 0140	0221 0380	0241 2280	58	22	69

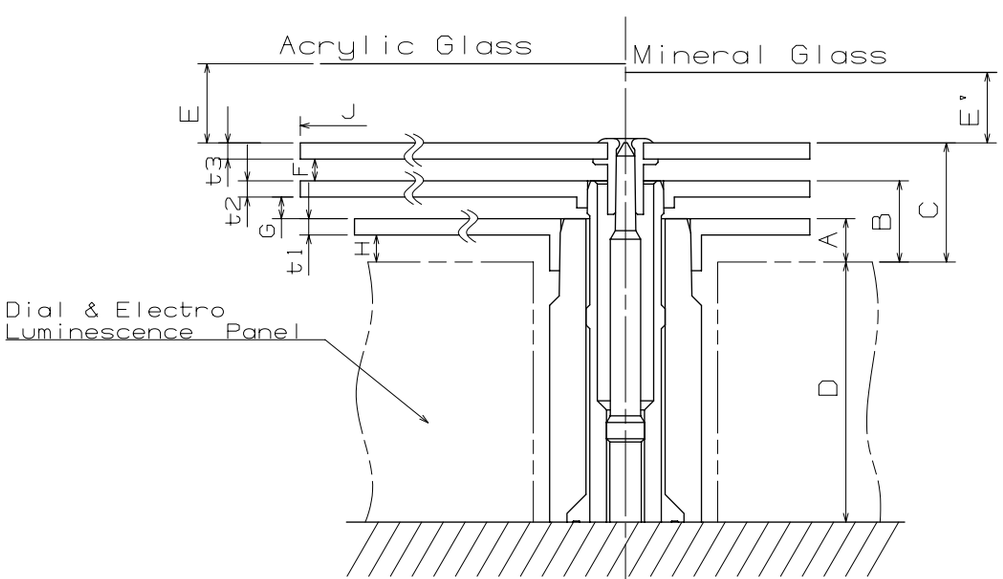

	A	B	C	D	E	E'	F	G	H	t1	t2	t3
TYPE M	40	75	110	240	*	*	20	20	25	15	15	15

*		J	
	Max 800	800□850	850□
E'	Min 40	Min 45	Min 65
E	Min 48	Min 53	Min 73

Scale : 15/1
Unit : 1=1/100mm

Version:4

SII Products

Hand Fitting

Cal. PC21AF

Hour hand unbalance ≦ 0.3μN·m(30mg·mm)
Minute hand unbalance ≦ 0.3μN·m(30mg·mm)
Second hand unbalance ≦ 0.07μN·m(7mg·mm)

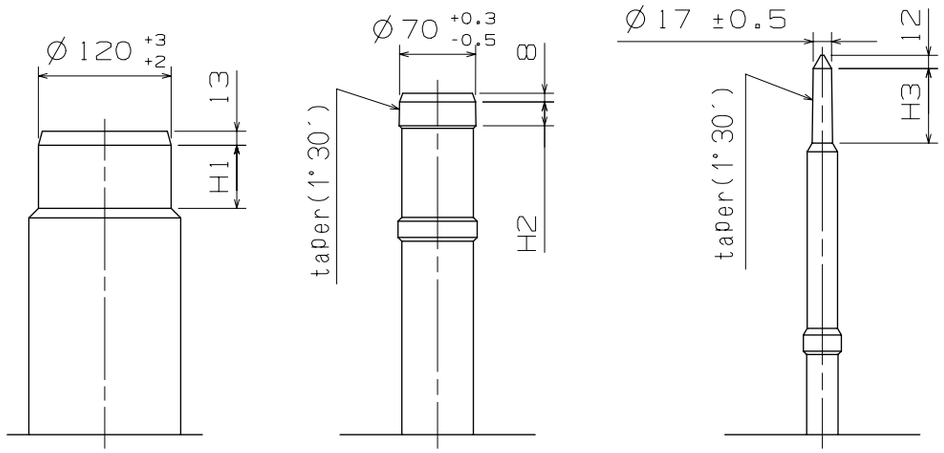

Hour wheel　　Center wheel　　Fourth wheel

	Part.No.			Dimension		
	Hour wheel 時針輪	Center wheel 分針輪	Fourth wheel 秒針輪	H1	H2	H3
TYPE M 一般針高	0273 0140	0221 0380	0241 2280	58	22	69

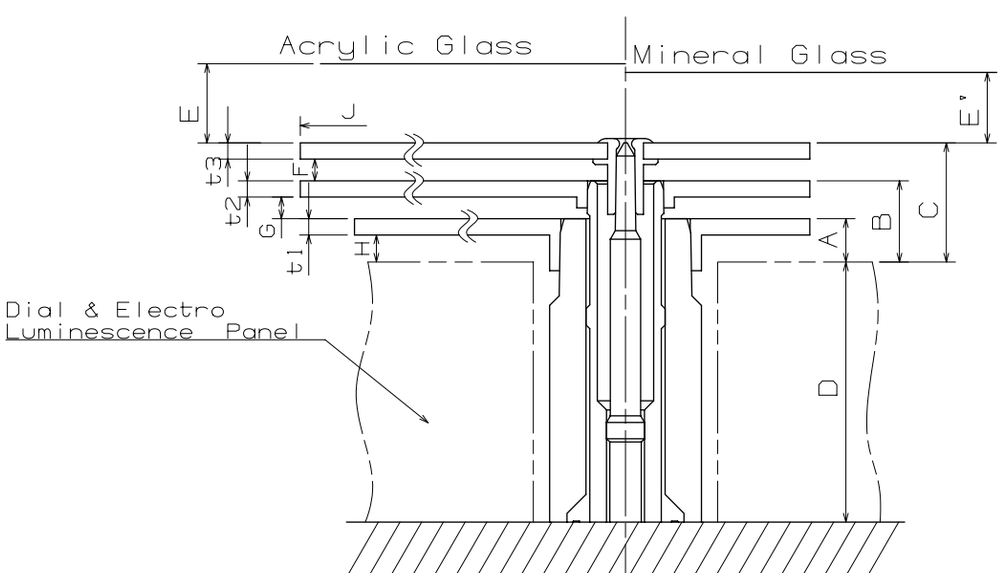

	A	B	C	D	E	E'	F	G	H	t1	t2	t3
TYPE M 一般針高	40	75	110	240	*	*	20	20	25	15	15	15

*		J	
	Max 800	800□850	850□
E'	Min 40	Min 45	Min 65
E	Min 48	Min 53	Min 73

Scale : 15/1
Unit : 1=1/100mm

Version:4

SII Products

Hand Setting Stem

Cal. PC21AF

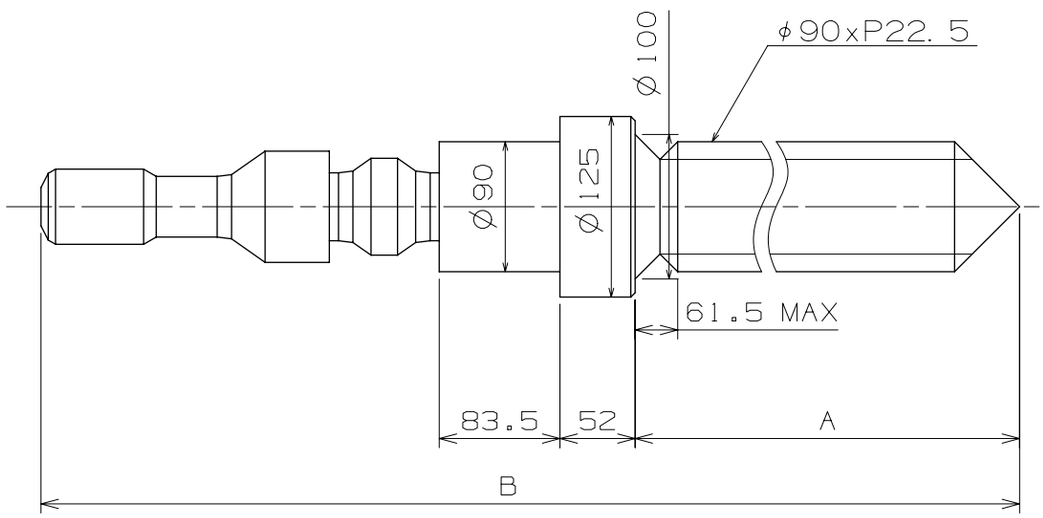

	Part. No.	A	B
TYPE A	0354 1270	1763	2174

Do not lubricate the hand setting stem.

Scale : 20/1
Unit : 1=1/100mm

Version:4

SII Products

TMI
TIME MODULE

Dial-1

Cal. PC21AF

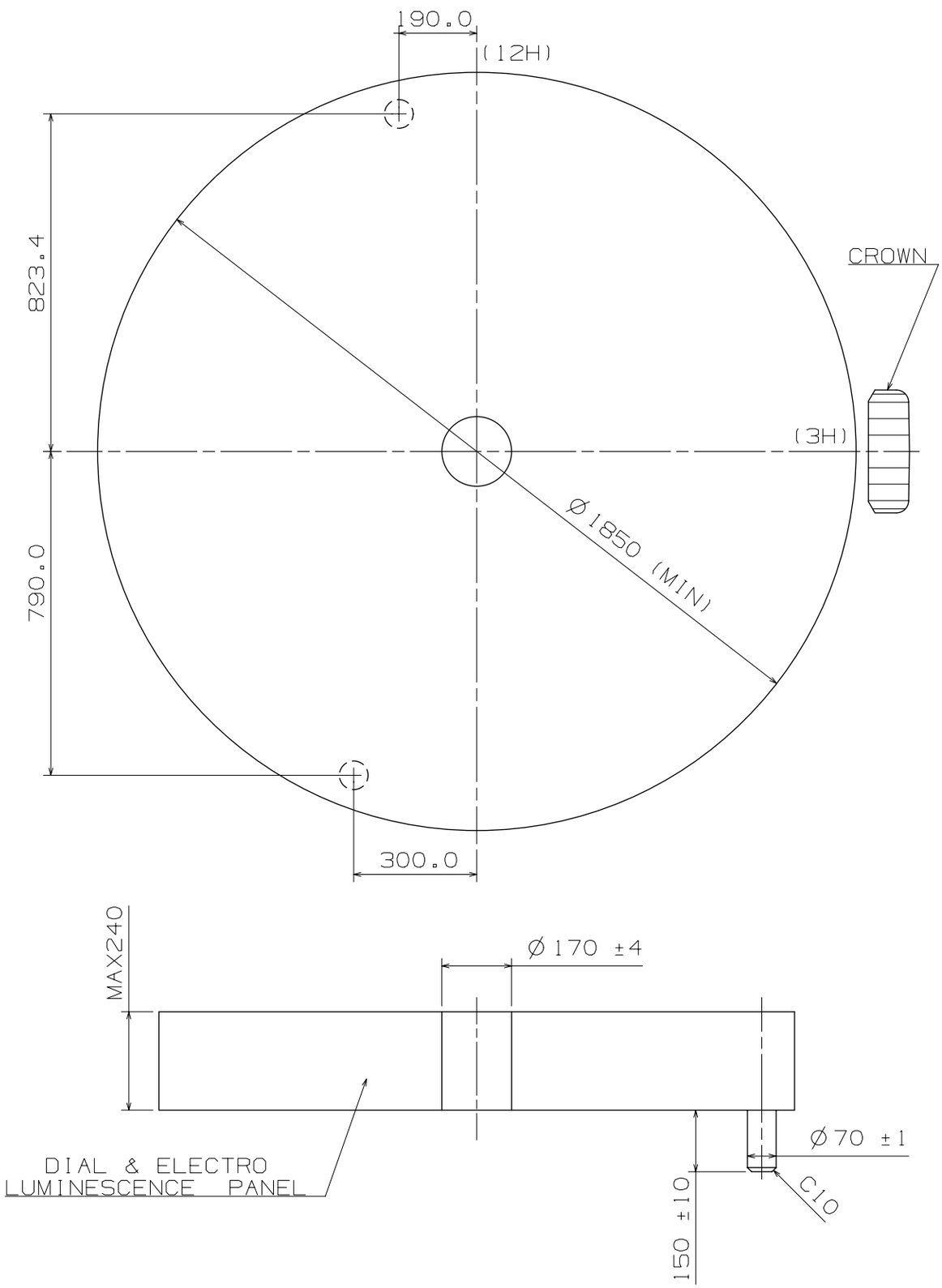

Scale : 7/1

Unit : 1=1/100

Version:2

SII Products

Casing Ring

Cal. PC21AF

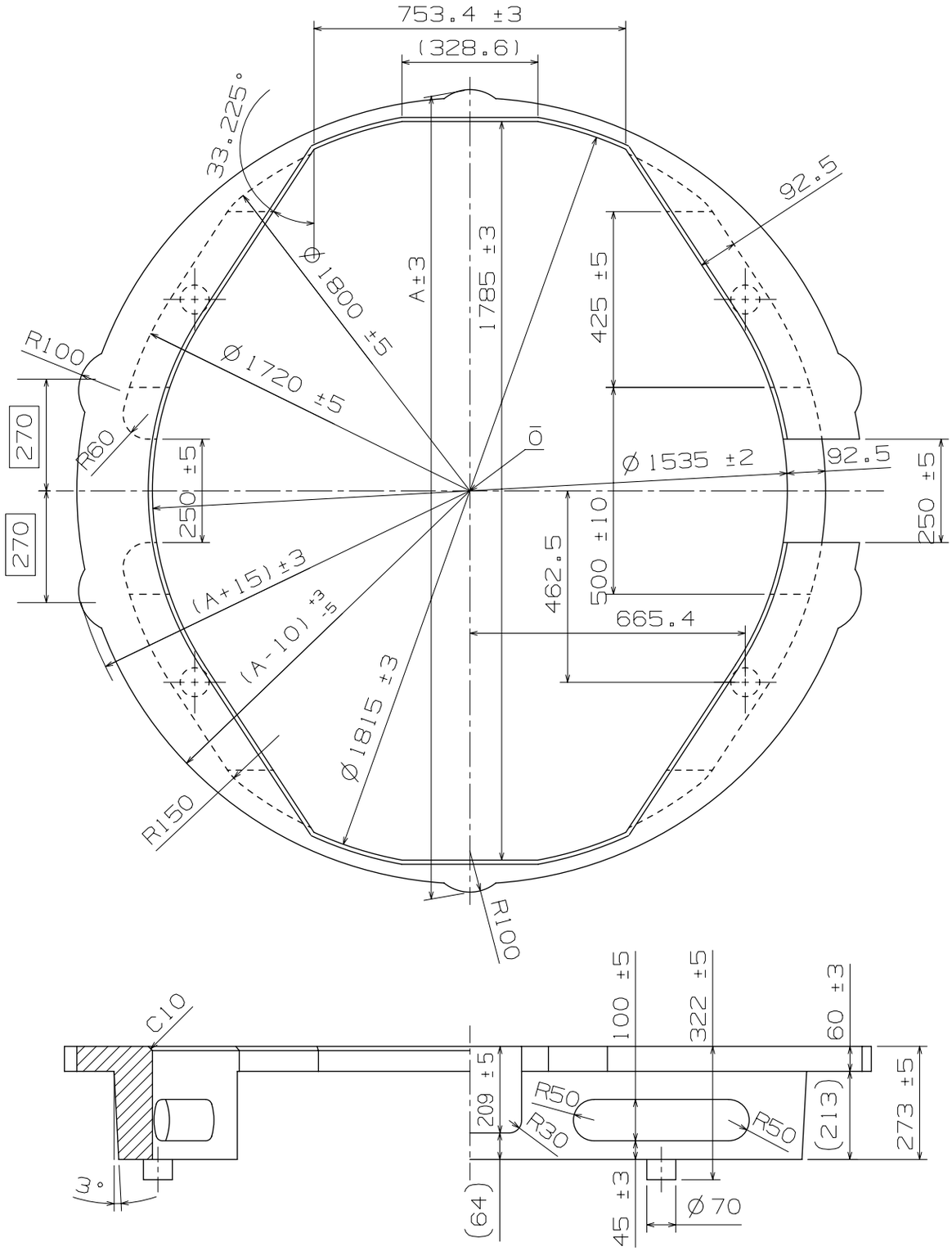

Scale : 7/1

Unit : 1=1/100

Version:2

SII Products

Assembly Plan

Cal. PC21AF

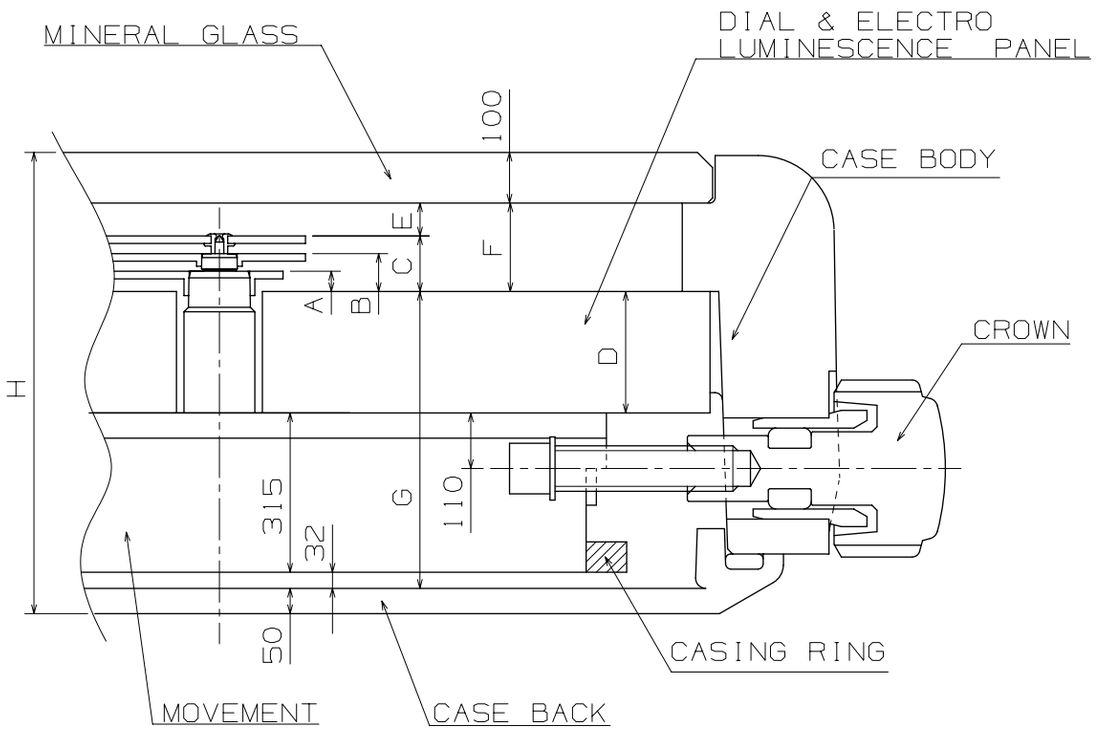

	A	B	C	D	E	F	G	H
TYPE M	40	75	110	240	65	175	587	912

Scale : ≠

Unit : 1=1/100

Version:2

SII Products

Hands

Cal. PC21AF

SECOND

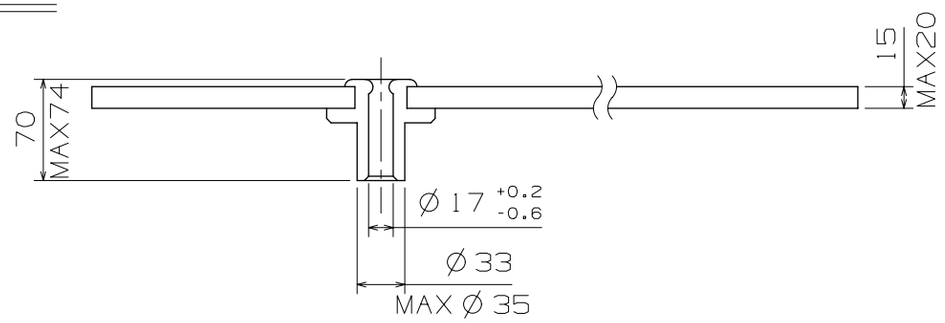

MINUTE

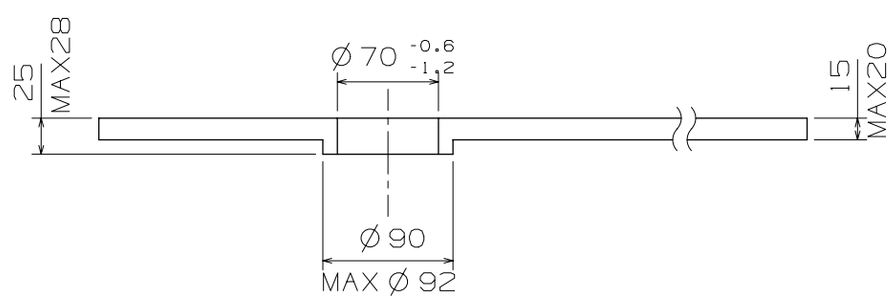

HOUR

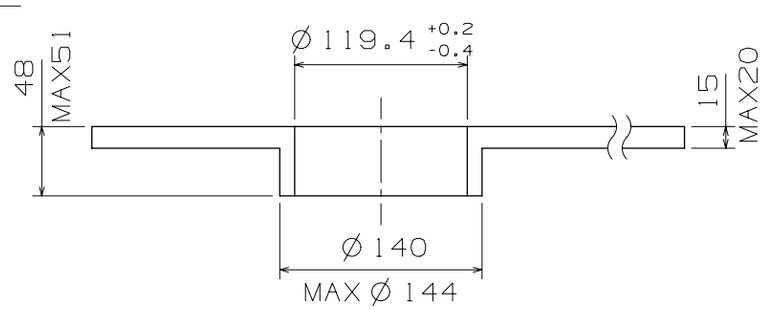

Scale : 20/1

Unit : 1=1/100

Version:4

SII Products