TIME MODULE

Revised on : 28. May. 2012

TECHNICAL GUIDE
&
PARTS CATALOGUE

Cal. NH0*/1* Series

AUTOMATIC MECHANICAL

SII Products

PARTS CATALOGUE / TECHNICAL GUIDE
Cal.NH0*/1* Series

TIME MODULE

[SPECIFICATION]

Version-01

Item \ Cal. No.		NH05	NH15	NH06	NH16
Movement		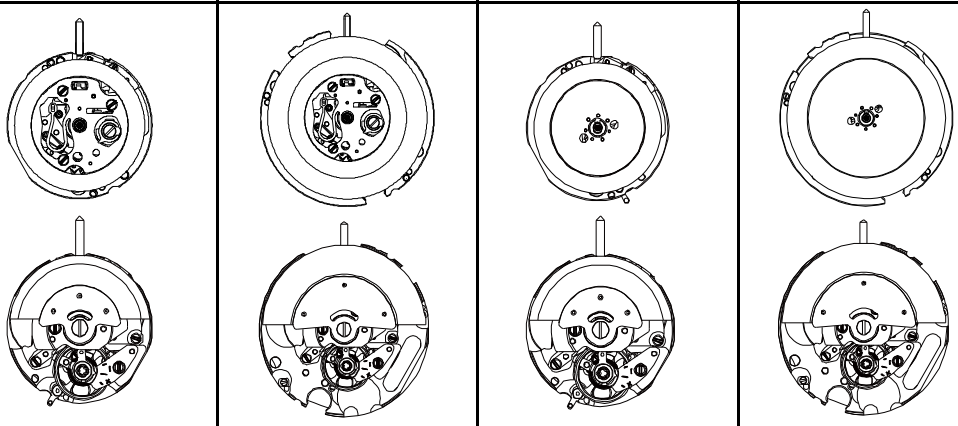			
Movement size	Outside diameter	Φ17.5mm	Φ23.8mm	Φ17.5mm	Φ23.8mm
	Casing diameter	Φ17.2mm	Φ23.4mm	Φ17.2mm	Φ23.4mm
	Total height	5.92 mm	6.01 mm	5.92 mm	6.01 mm
Time indication		3 Hands (Hour , Minute , Second) Date Calendar		3 Hands (Hour , Minute , Second) Day & Date Calendar	
Basic function		Manual winding Automatic winding with ball bearing Date display with quick date correction		Manual winding Automatic winding with ball bearing Day & Date display with quick day & date correction	
Frequency		21,600 vibrations per hour			
Accuracy	Static accuracy	-35~+55 seconds per day * Measurement should be done within 10~60 minutes after fully wound up. * All measurements are made without the calendar in function.			
	Measurement position	Direction of 3 positions. (1) Dial up (2) 9 o'clock up (3) 6 o'clock up			
	Lift angle	52 deg.			
	Measurement time	20 seconds * Equipment to be used : Witschi WATCH EXPERT			
	Posture difference	Difference is under 90 seconds within max value and min value. * Measurement should be done within 10~60 minutes after fully wound up. * Direction of 4 positions. (1) 12 o'clock up (2) 9 o'clock up (3) 6 o'clock up (4) 3 o'clock up			
	Isochronisms (24h-0h)	-35~+35 seconds per day. * Direction of position. : Dial up * Difference of static accuracy of 24h and 0h			
Duration time		More than 40 hours … Mainspring after fully wound up. * Posture to confirmation : Dial up			
Winding the mainspring		<< Movements >> ・Fully wounded up by turning the crown min 55 times. < Complete Watch >> A winding machine is needed to wind up the mainspring. Full wind up conditions ・Rotary speed : 30 rpm ・Operating time: 60 minutes			
Jewels		21 jewels			
Crown position		Left rotation		Right rotation	
	Normal position	Free		Manual winding	
	First click	Date setting		NH05/15:Free NH06/16:Day setting	
	Second click	Hand setting		Hand setting	

Disassembling procedures Figs. (1) → (13) Reassembling procedures Figs. (13) → (1)	**Type of oil** Moebius 9010 MO-4	**Oil quantity mark** NORMAL QUANTITY SUFFICIENT QUANTITY

<<NH05/15>>

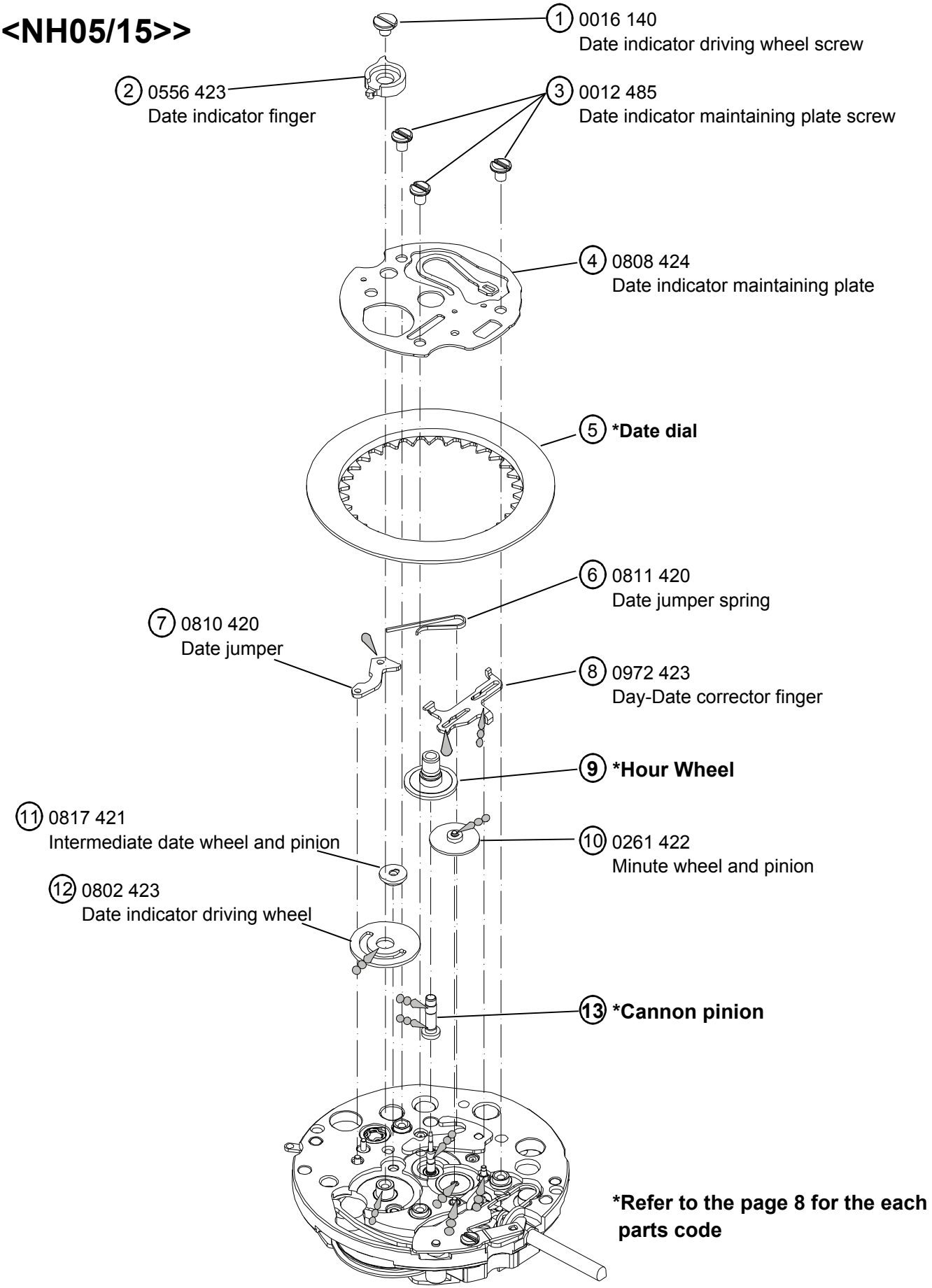

***Refer to the page 8 for the each parts code**

Disassembling procedures Figs. (1) → (17) Reassembling procedures Figs. (17) → (1)	**Type of oil** Moebius 9010 MO-4	**Oil quantity mark** NORMAL QUANTITY SUFFICIENT QUANTITY

<<NH06/16>>

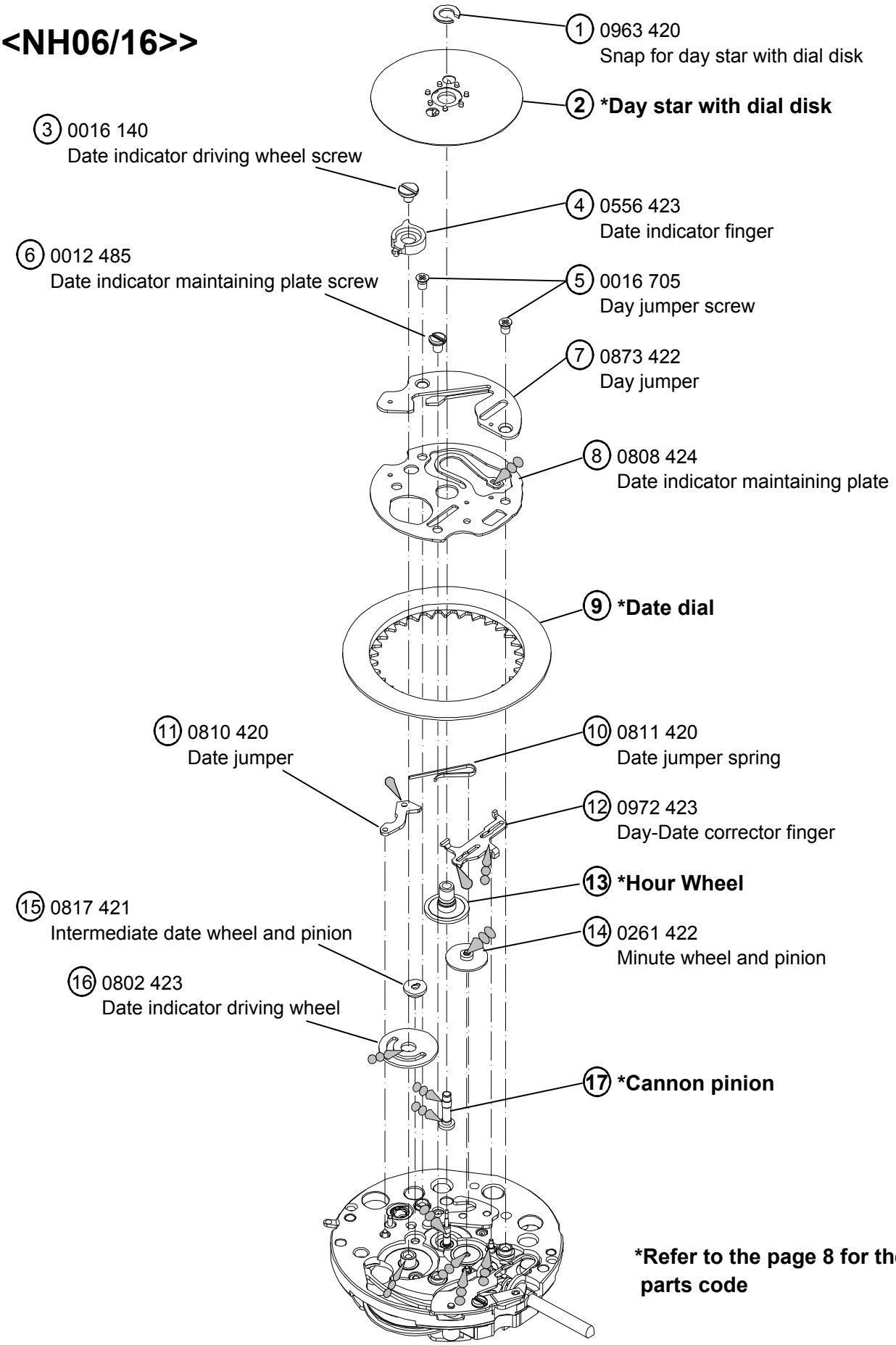

***Refer to the page 8 for the each parts code**

Disassembling procedures Figs. (1) → (40)

Reassembling procedures Figs. (40) → (1)

Type of oil
- Moebius 9010
- MO-4

Oil quantity mark
- NORMAL QUANTITY
- SUFFICIENT QUANTITY

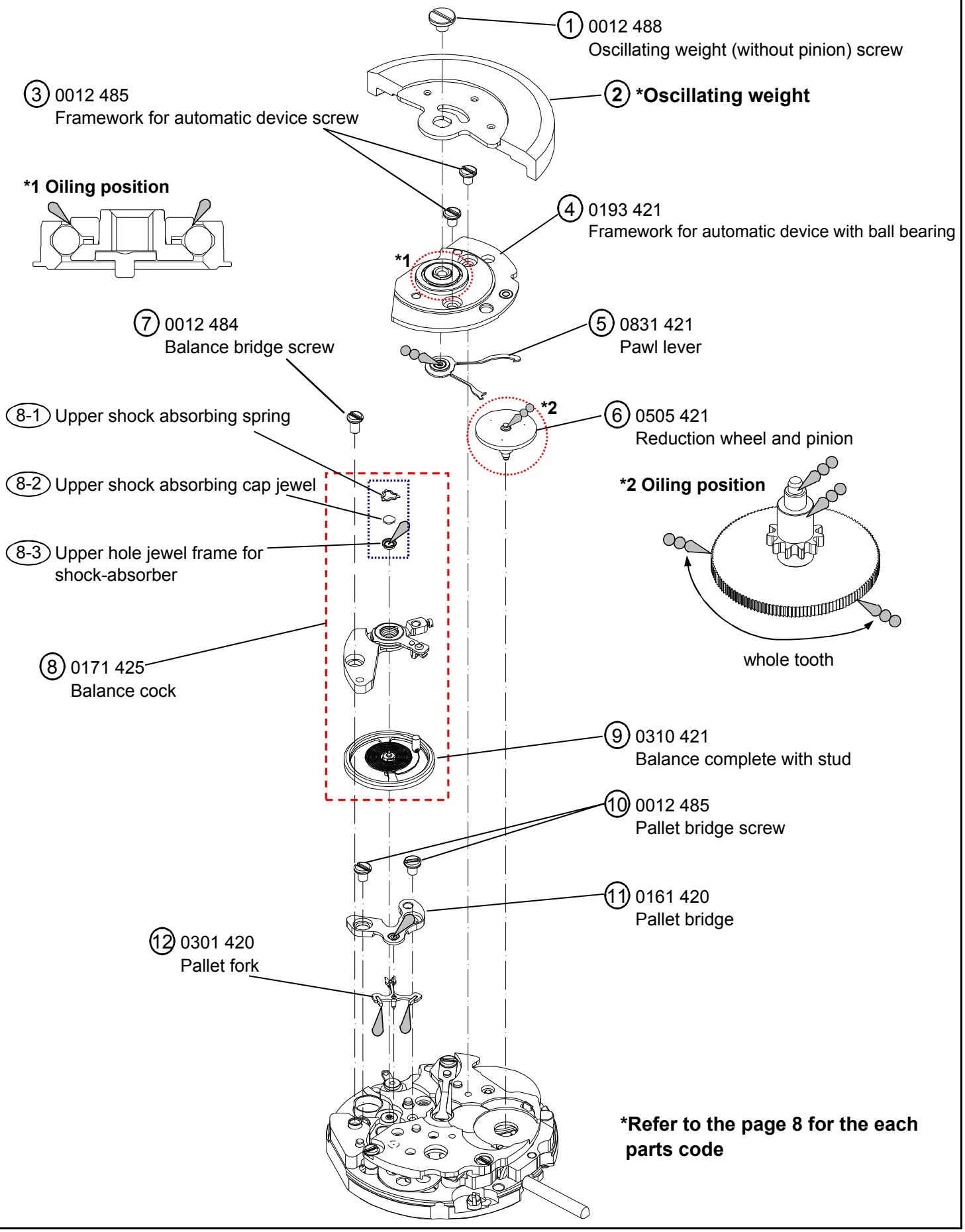

***Refer to the page 8 for the each parts code**

Type of oil
Moebius 9010
MO-4

Oil quantity mark
NORMAL QUANTITY
SUFFICIENT QUANTITY

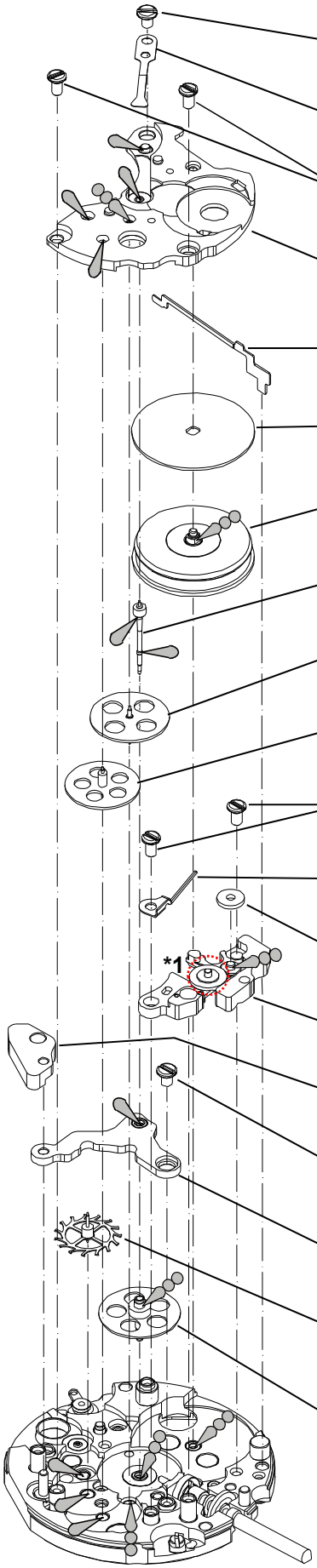

(13) 0012 485
Barrel and train wheel bridge screw (B)

(14) 0396 421
Friction spring for center seconds pinion

(15) 0012 484
Barrel and train wheel bridge screw (A)

(16) 0112 427
Barrel and train wheel bridge

(17) 0381 420
Click

(18) 0285 420
Ratchet wheel

(19) 0201 420
Complete barrel with mainspring

(20) *Center seconds pinion

(21) 0231 421
Third wheel and pinion

(22) 0241 421
Fourth wheel and pinion

(23) 0012 484
Screw for locking sheet for idle wheel

(24) 0363 420
Sliding crown wheel spring

(25) 0237 421
Intermediate ratchet wheel

***1 Oiling position (side view)**

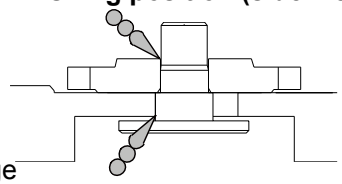

(26) 0542 421
Rocking sheet for idle wheel

(27) 0105 421
Lower plate for balance bridge

(28) 0012 485
Center wheel bridge screw

(29) 0121 422
Center wheel bridge

(30) 0251 420
Escape wheel and pinion

(31) *Center wheel and pinion

***Refer to the page 8 for the each parts code.**

Type of oil
Moebius 9010
MO-4

Oil quantity mark
NORMAL QUANTITY
SUFFICIENT QUANTITY

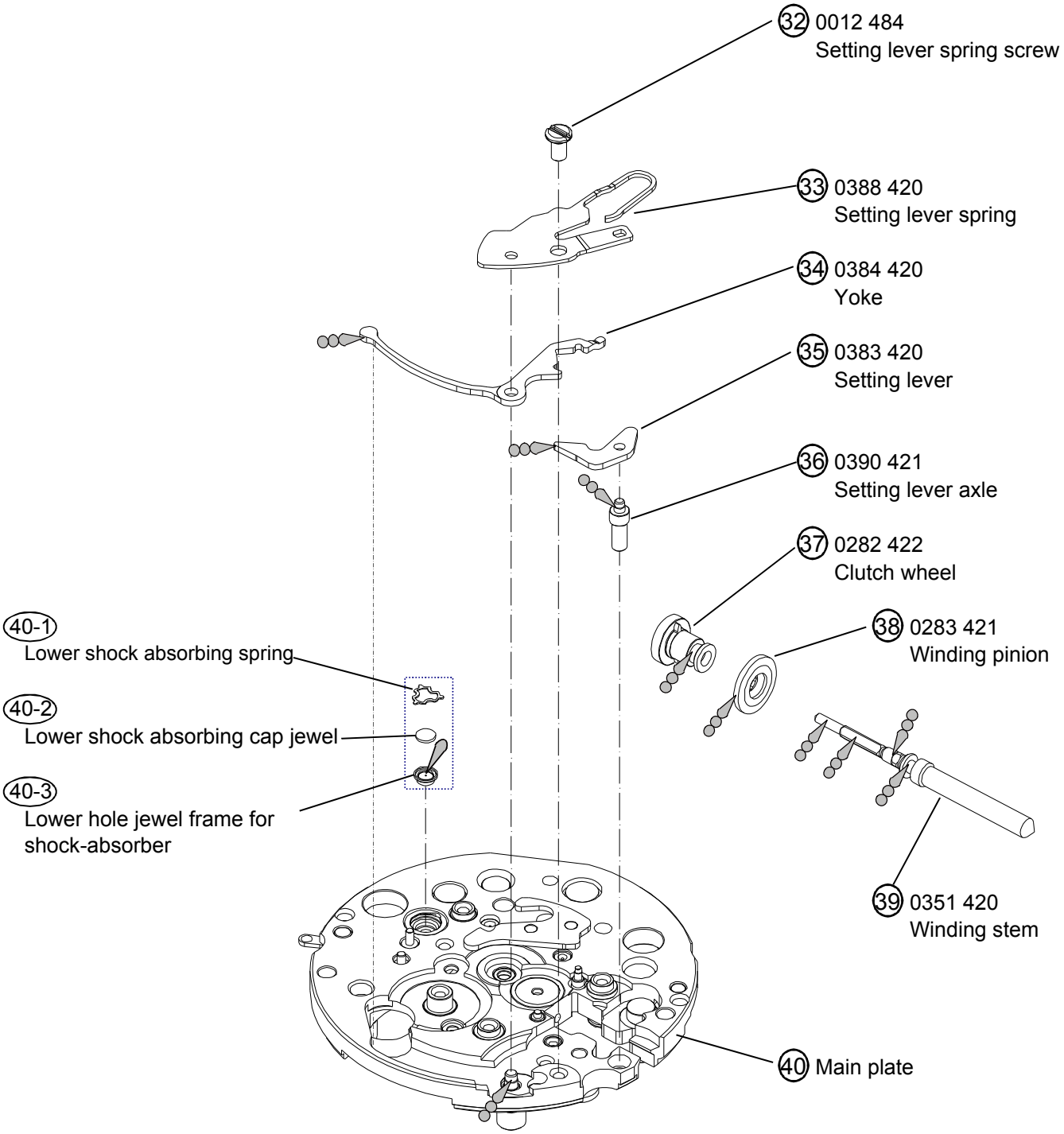

***Refer to the page 8 for the each parts code.**

Remarks

● **List of screws**

Parts No.	Appearance	Parts Name	Q'ty
0012 485	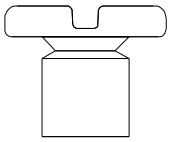	P-2 ③ Date indicator maintaining plate screw	3
		P-3 ⑥	1
		P-4 ③ Framework for automatic device screw	2
		P-4 ⑩ Pallet bridge screw	2
		P-5 ⑬ Barrel and train wheel bridge screw (B)	1
		P-5 ㉘ Center wheel bridge screw	1
0012 484	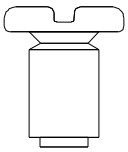	P-4 ⑦ Balance bridge screw	1
		P-5 ⑮ Barrel and train wheel bridge screw (A)	2
		P-5 ㉓ Screw for locking sheet for idle wheel	2
		P-6 ㉜ Setting lever spring screw	1
0016 140	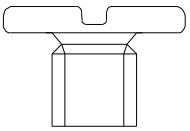	P-2 ① P-3 ③ Date indicator driving wheel screw	1
0012 488	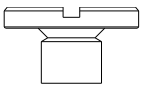	P-4 ① Oscillating weight (without pinion) screw	1
0016 705	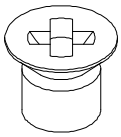	P-3 ⑤ Day jumper screw	2

All parts code are subject to change without notice.

Remarks

② Day star with dial disk … Cal.NH06/16 only (P-3)

Cal. code	Parts code	Position of crown	Position of day frame	Color of letters	Color of background	Language
NH06A	0160 224	3H	3H	MON~FRI :Black SAT :Blue SUN :Red	Silver (Plain Metal)	English & Spanish
NH16A	0150 172	3H	3H	MON~FRI :Black SAT :Blue SUN :Red	Silver (Plain Metal)	English & Spanish

⑤ Date dial … Cal.NH05/15 (P-2)

Cal. code	Parts code	Position of crown	Position of date frame	Color of numbers	Color of background
NH05A	0801 423	3H	3H	Black	Silver (Plain Metal)
NH15A	0878 422	3H	3H	Black	Silver (Plain Metal)

⑨ Date dial … Cal.NH06/15 (P-3)

Cal. code	Parts code	Position of crown	Position of date frame	Color of numbers	Color of background
NH06A	0801 274	3H	3H	Black	Silver (Plain Metal)
NH16A	0878 420	3H	3H	Black	Silver (Plain Metal)

⑨ Hour Wheel … Cal.NH05/15 (P-2)

Cal. code	Parts code	Cal. code	Parts code
NH05A	0271 425	NH15A	0273 030

⑬ Hour Wheel … Cal.NH06/16 (P-3)

Cal. code	Parts code	Cal. code	Parts code
NH06A	0271 425	NH16A	0273 030

⑬ Cannon pinion … Cal.NH05/15 (P-2)

Cal. code	Parts code	Cal. code	Parts code
NH05A	0225 422	NH15A	0225 424

⑰ Cannon pinion … Cal.NH06/16 (P-3)

Cal. code	Parts code	Cal. code	Parts code
NH06A	0225 422	NH16A	0225 424

② Oscillating weight (P-4)

Cal. code	Parts code	Marking	Cal. code	Parts code	Marking
NH05A	0500 436	Japan mark	NH15A	0500 437	Japan mark
	0500 446	Malaysia mark		0500 465	Malaysia mark
NH06A	0500 438	Japan mark	NH16A	0500 439	Japan mark
	0500 448	Malaysia mark		0500 467	Malaysia mark

⑳ Center second pinion (P-5)

Cal. code	Parts code	Cal. code	Parts code
NH05A NH06A	0245 425	NH15A NH16A	0245 429

㉛ Center wheel and pinion (P-5)

Cal. code	Parts code	Cal. code	Parts code
NH05A NH06A	0224 425	NH15A NH16A	0224 429

<u>*All parts code are subject to change without notice.</u>

・The following explanation is only for Cal.NH05/15/06/16.

NH05/15 ④ (P-2)
NH06/16 ⑧ (P-3) **Date indicator maintaining plate**

Day-Date corrector finger is set to the hole of Date indicator maintaining plate.

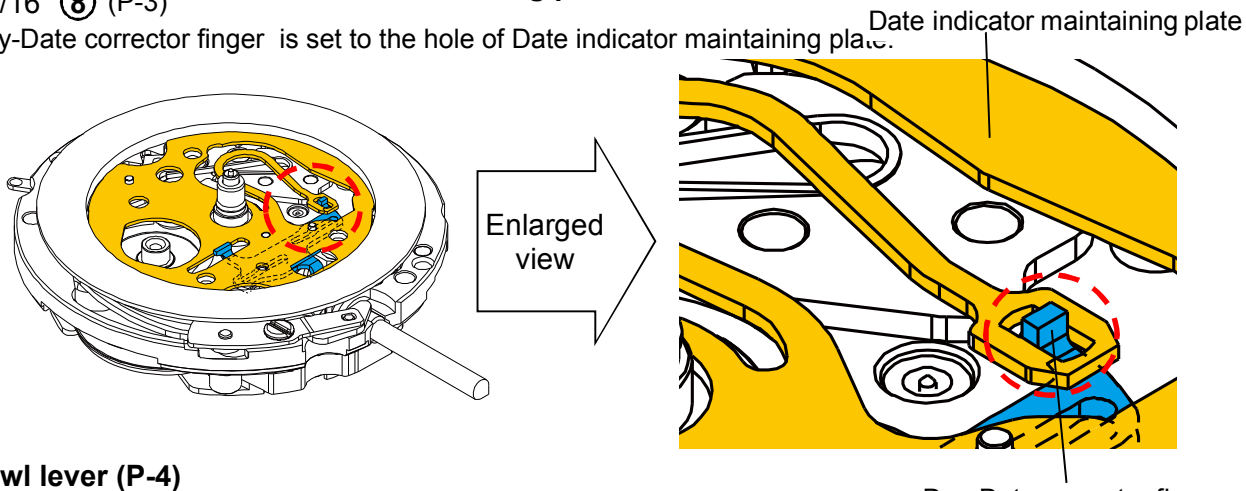

⑤ **Pawl lever (P-4)**

Pawl lever has to be set to engage with the teeth of Reduction wheel and pinion.

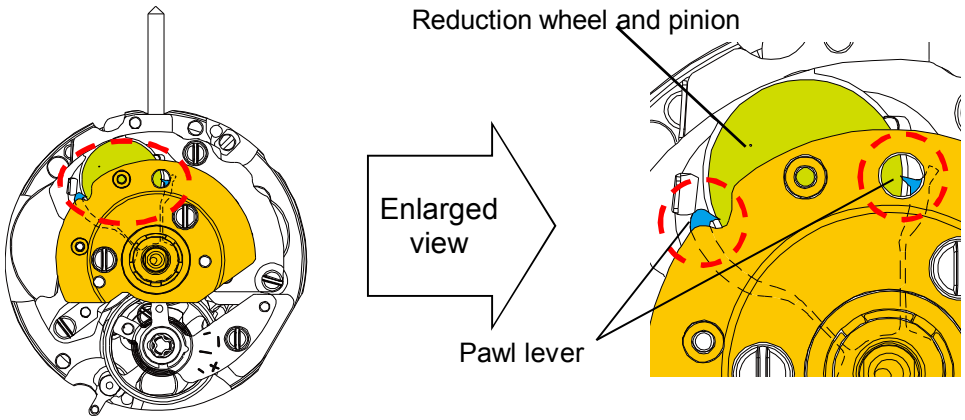

㉔ **Sliding crown wheel spring (P-5)**

Please set Sliding crown wheel spring to the side of Sliding crown wheel.

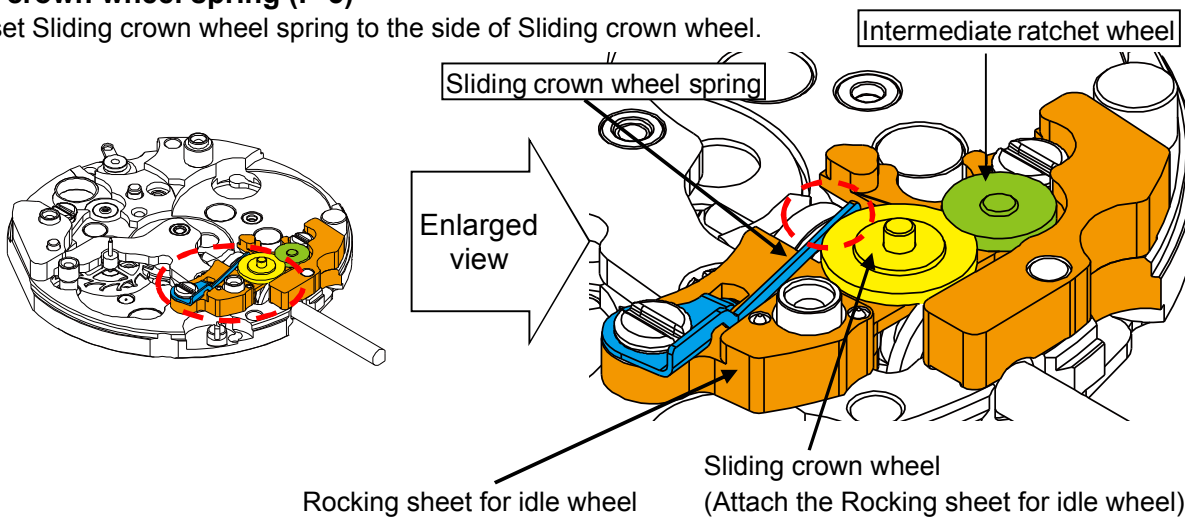

1.Setting position

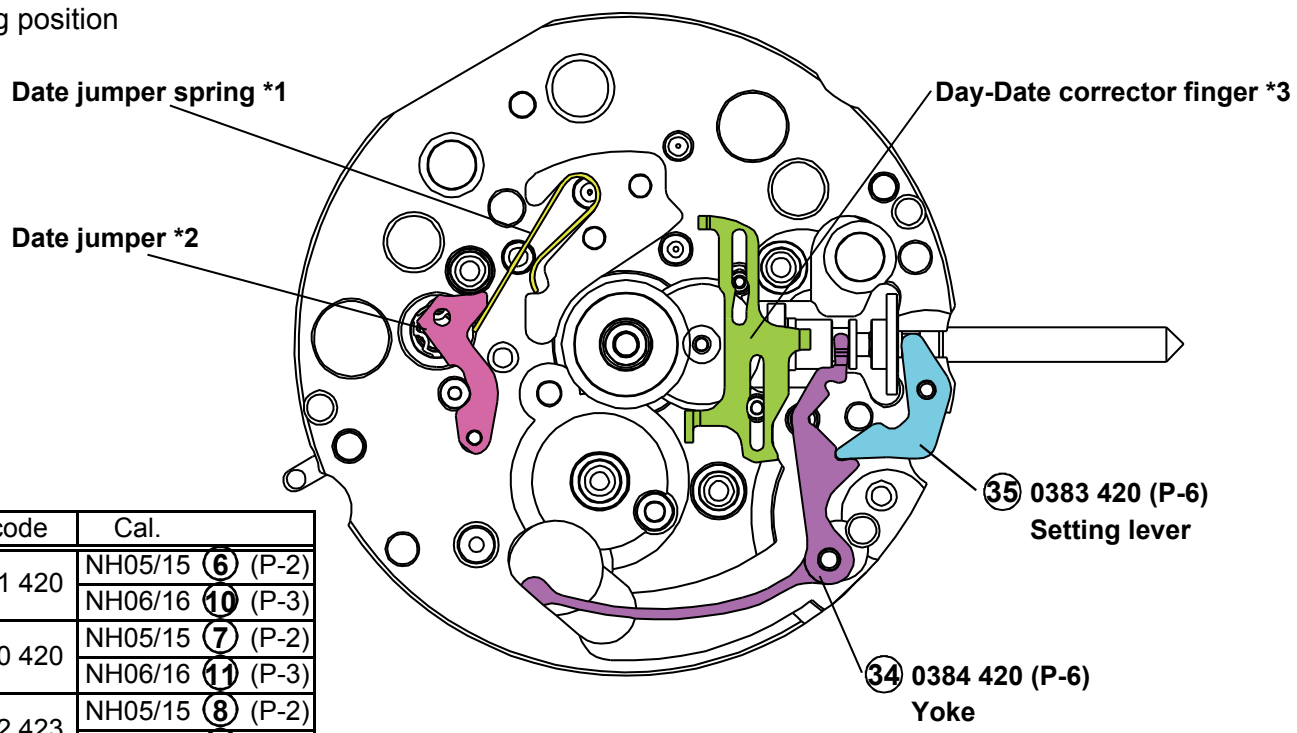

Parts code		Cal.
*1	0811 420	NH05/15 6 (P-2)
		NH06/16 10 (P-3)
*2	0810 420	NH05/15 7 (P-2)
		NH06/16 11 (P-3)
*3	0972 423	NH05/15 8 (P-2)
		NH06/16 12 (P-3)

2.Setting position of oscillating weight

・Before assembling oscillating weight.
Please set Oscillating weight according to the straight part of Framework for automatic device.

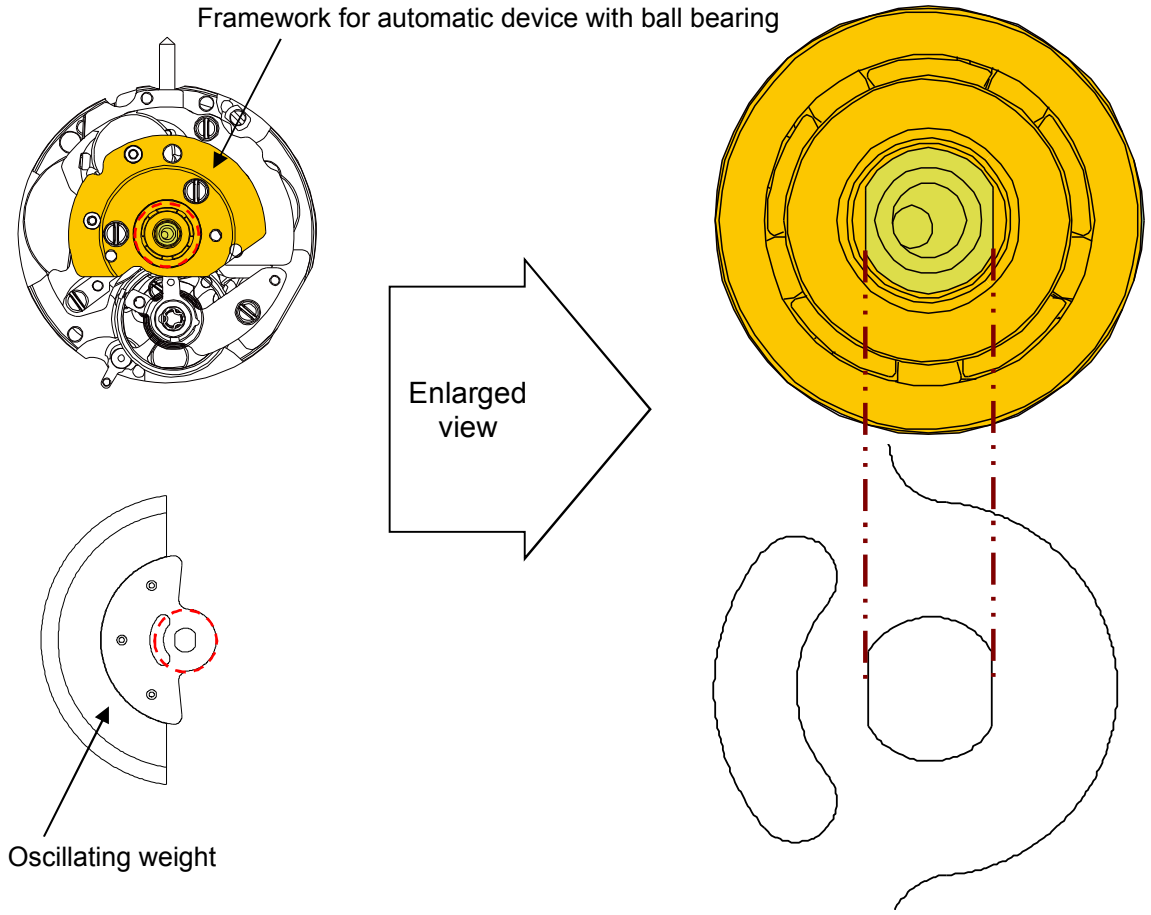

3.How to attach hands

Place the movement directly on a flat metal plate or something similar to attach the hands.
We recommend the use of movement holder to attach hands.
For hands attachment, please use a special equipment.
When the movement receives a strong shock, it may be damaged.

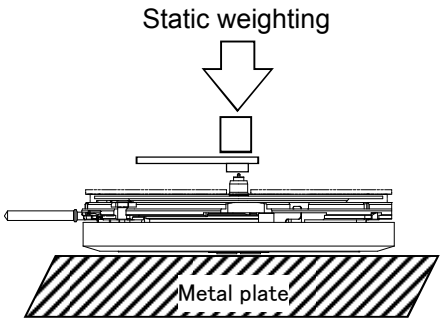

4.Accuracy measurement condition

Static Accuracy : -35~+55 seconds per day

Measurement Conditions

1) Measurement should be done within 10~60 minutes after fully wound up.
2) Lift angle : 52 deg.
3) Measurement position : (1) Dial up (2) 9 o'clock up (3) 6 o'clock up
4) Minimum measurement Time : 20 seconds
5) Stabilizing Time :
   Leave the watch for at least 20 seconds to stabilize after you change its measurement position.

OPERATION

[NH05/15]

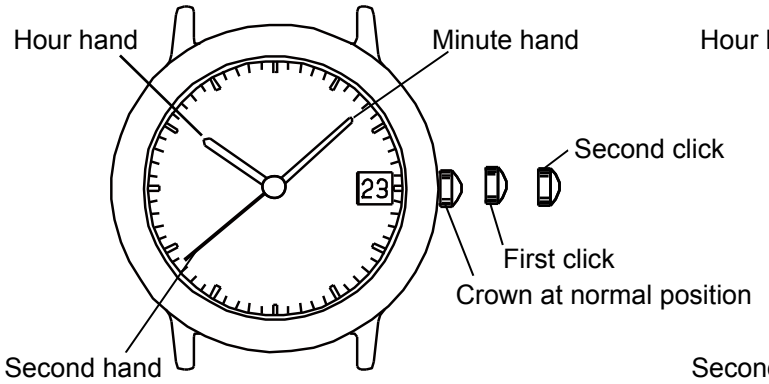

[NH06/16]

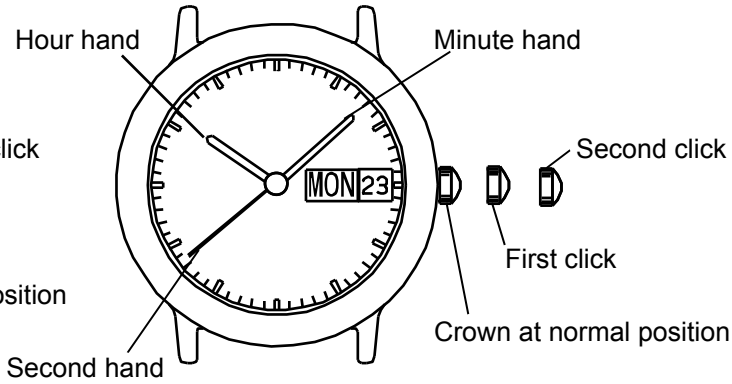

1.Time setting

1) Pull out the crown to the second click position.
2) Turn the crown to set hour and minute hands.
   (Check that AM/PM is set correctly.)
3) Push the crown back into the normal position.

2.Date setting

1) Pull out the crown to the first click position.
2) Turn the crown to left for date setting.
   * Do not set the calendar between 10:00 P.M. and 1:00 A.M. If the setting of the calendar is made during this period, the date will not change to the next date. Please set the calendar after changing the time other than the above period.
3) Turn the crown to right for day setting. … Cal.NH06 / 16 only
4) Push the crown back into the normal position.

3.To wind up the mainspring

1) Manual winding
   Rotate crown clockwise at normal position by min 55 times.

2) To wind up with winding machine.
   Full wind up conditions
   ・Rotary speed : 30 rpm
   ・Operating time : 60 minutes

Note in time setting

When time setting is done with counterclockwise, date dial & day dial be reversed.
The function, there is no problem.
Please set the date & day by using the quick change function when the date & day shown was incorrect.